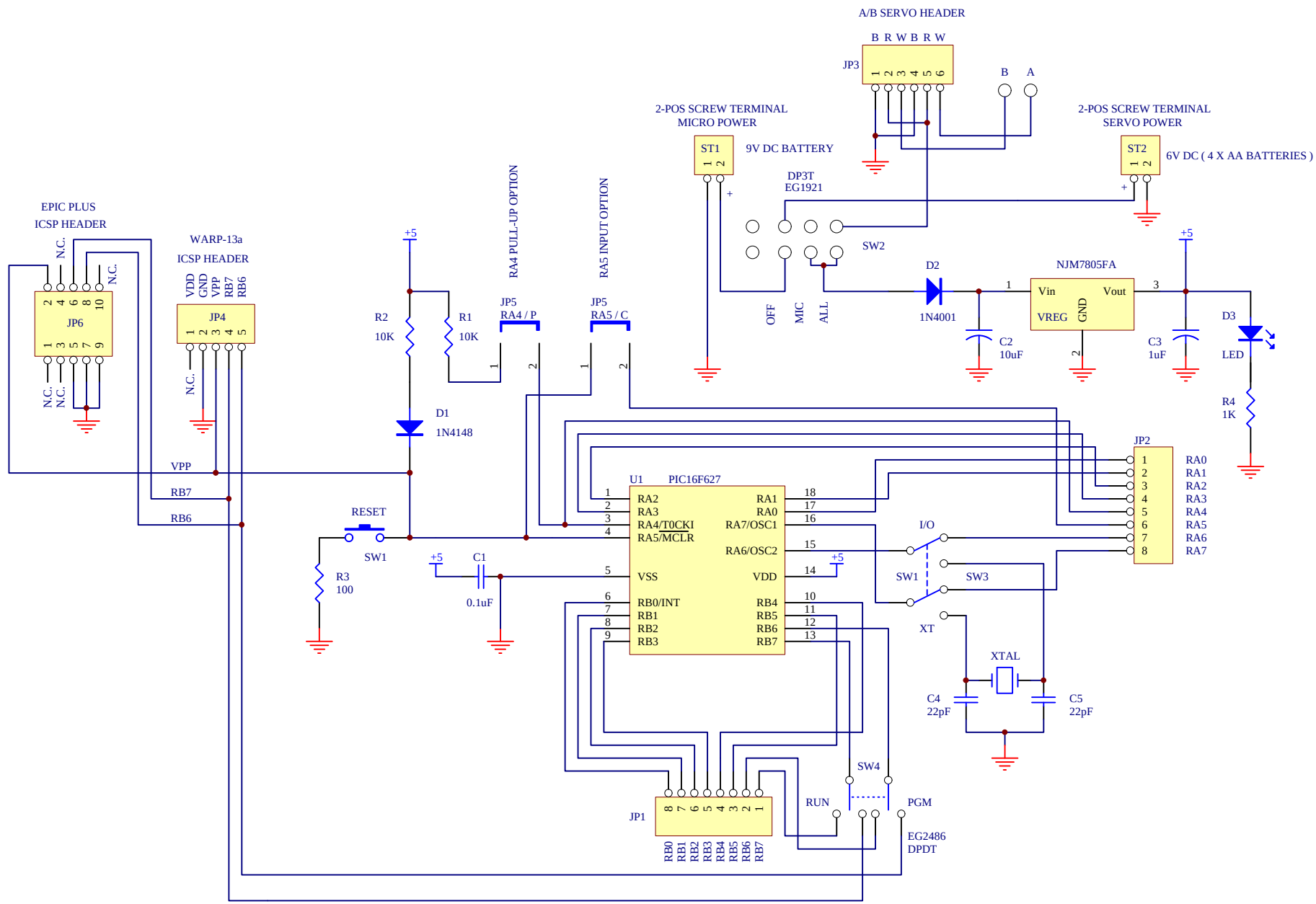

Title	MICRO-BOT	
Size: Letter	Number	Revision: A.2
Date: 9-Jun-2003		Sheet of
File: C:\CAD\SCHEMATICS.Ddb		Drawn By: B. REYNOLDS