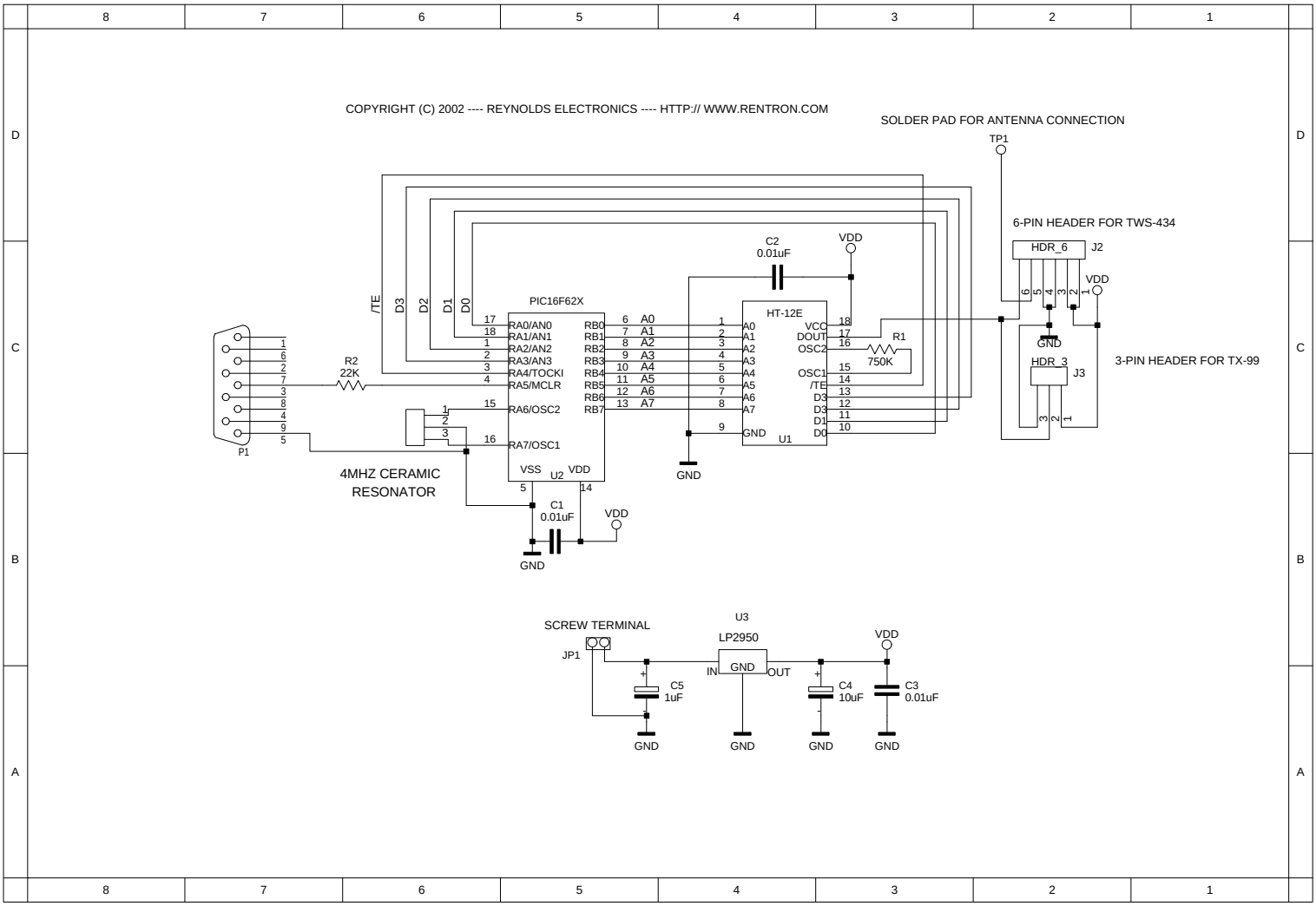
COPYRIGHT (C) 2002 ---- REYNOLDS ELECTRONICS ---- HTTP:// WWW.RENTRON.COM
SOLDER PAD FOR ANTENNA CONNECTION
TP1
6-PIN HEADER FOR TWS-434
HDR_6
J2
VDD
C2
0.01uF
PIC16F62X
HT-12E
/TE
D3
D2
D1
D0
RA0/AN0
RA1/AN1
RA2/AN2
RA3/AN3
RA4/TOCKI
RA5/MCLR
RA6/OSC2
RA7/OSC1
RB0
RB1
RB2
RB3
RB4
RB5
RB6
RB7
A0
A1
A2
A3
A4
A5
A6
A7
VCC
DOUT
OSC2
OSC1
GND
U1
R1
750K
R2
22K
P1
4MHZ CERAMIC
RESONATOR
VSS
U2
C1
0.01uF
HDR_3
J3
3-PIN HEADER FOR TX-99
SCREW TERMINAL
JP1
U3
LP2950
IN
OUT
C5
1uF
C4
10uF
C3
0.01uF