INFRARED TO RF SYSTEM SCHEMATICS

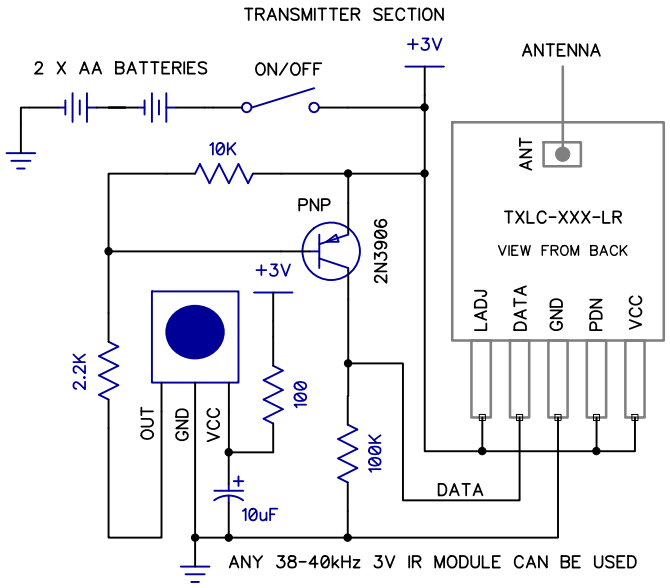

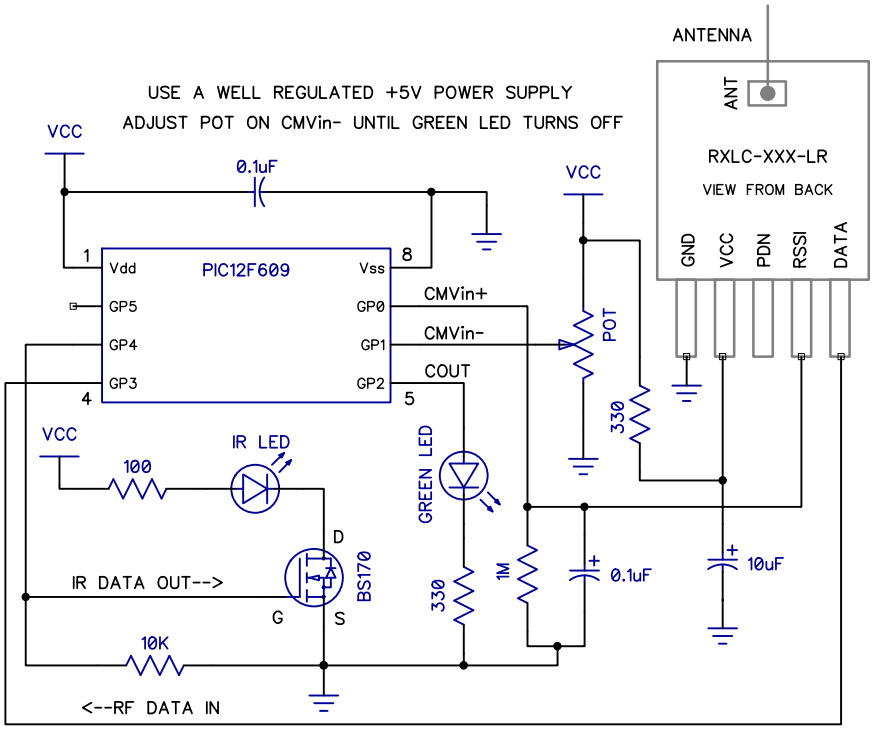

RF RECEIVER SECTION WITH INFARED OUT

COPYRIGHT (c) 2010 REYNOLDS ELECTRONICS HTTP://WWW.RENTRON.COM

VISIT THE IR_TO_RF PROJECT PAGE HERE: http://www.rentron.com/NEW_IR_TO_RF.htm